DS-2DE4120/4220-AE(3)

1/2MP Network PTZ Dome Camera

Compact-sized

Key features

- 1/3"(1/2.8") Progressive Scan CMOS
- 720/1080P HD real-time resolution
- 20X Optical zoom, 16X digital zoom
- True Day/Night, D WDR , 3D DNR
- Privacy Mask, Alarm input/output
- 3D intelligent positioning
- PoE+/ PoE / 24VAC power supply
- Compact-sized design

Dimensions

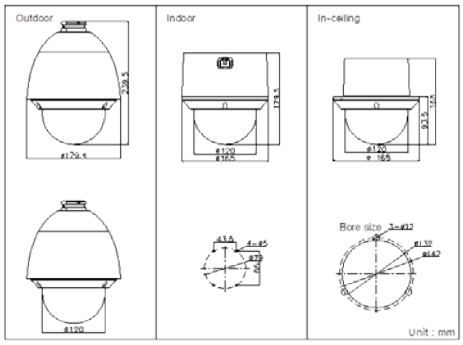

Accessories

DS-1602ZJ DS-1602ZJ-Corner DS-1602ZJ-Pole DS-1602ZJ-Box DS-1619ZJ

Available models

DS-2DE4120-AE, 24VAC/PoE+, outdoor
DS-2DE4120-AE3, 24VAC/PoE, indoor
DS-2DE4220-AE, 24VAC/PoE+, outdoor
DS-2DE4220-AE3, 24VAC/PoE, indoor

	DS-2DE4120-AE(3)	DS-2DE4220-AE(3)
Camera		
Image sensor	1/3" Progressive Scan CMOS	1/2.8" Progressive Scan CMOS
Effective pixel	1280(H) × 720(V)	1920(H) ×1080(V)
Max. Image Resolution	Color : 0.05 lux (F1.6, 1/30 sec, 50 IRE, AGC On) B/W : 0.01 lux (F1.6, 1/30 sec, 50 IRE, AGC On) Color : 0.02 lux (F1.6, 1/1 sec, 50 IRE, AGC On) B/W : 0.002 lux (F1.6, 1/1 sec, 50 IRE, AGC On)	
White balance	Auto/Manual/ATW/Indoor/Outdoor/Daylight lamp/Sodium lamp	
AGC	Auto / Manual	
S / N ratio	≥ 52dB	
Digital noise reduction	3D DNR	
Backlight compensation	BLC	
Wide dynamic range	Digital WDR	
Defog	Support	
Shutter speed	1/1~ 1/10,000s	
Day & Night	IR Cut Filter	
Digital zoom	16X	
Focus mode	Auto / Semiautomatic / Manual	
Privacy Mask	2 privacy masks programmable	
Lens		
Focal length	4.7-94mm, 20x	
Zoom speed	Approx.3s (Optical Wide-Tele)	
Angle of view	58.3 ~ 3.2 degree (Wide-Tele)	
Min. working distance	10 ~1000mm (Wide-Tele)	
Aperture range	F1.6 ~ F3.5	
Pan and Tilt		
Pan / Tilt range	Pan: 360° endless; Tilt: -2° ~ 90°(Auto Flip)	
Pan / Tiltr speed	Pan manual speed: 0.1° ~ 160°/s, Pan preset speed: 160°/s Tilt manual speed: 0.1° ~ 120°/s, Tilt preset speed: 120°/s	
Proportional zoom	Rotation speed can be adjusted automatically according to zoom multiples	
Number of preset	number of preset: 300	
Patrol	8 patrols, up to 32 presets per patrol	
Park action	Preset / Patrol / Pattern / Pan scan / Tilt scan / Random scan / Frame scan / Panorama scan	
Power-off memory	Support	
PTZ position display	On / off	
Preset freezing	Support	
Scheduled Task	Preset / Patrol / Pattern / Pan scan / Tilt scan / Random scan / Frame scan / Panorama scan/Dome reboot/Self-test action	
Local Video and Audio		
Alarm input / output	1 input (0-5V DC) / 1 relay output, alarm response actions configurable	
Alarm Trigger	Intrusion detection, Line crossing detection, Motion detection, Audio Exception Detection, Dynamic analysis, Tampering alarm, Network disconnect, IP address conflict, Storage exception Alarm Actions: Preset, Patrol, Pattern, Recording, Relay output, Upload center, Upload FTP, Email linkage	
Audio input / putput	1 mic/Line in, 2-2.4V[p-p]; output impedance: 1KΩ, ±10% / 1 output, Line level, impedance: 600Ω	
Network		
Ethernet	10Base-T / 100Base-TX, RJ45 connector	
Max. image resolution	1280×720	1920×1080
Sub Stream	50Hz:25fps(704×576), 25fps(352×288), 25fps(320×240) 60Hz:30fps(704×480), 30fps(352×240), 30fps(320×240)	
Frame rate	50Hz: 25 fps (1280×720); 60Hz: 30 fps (1280×720)	50Hz: 25 fps (1920×1080), 25 fps (1280×720); 60Hz: 30 fps (1920×1080), 30 fps (1280×720)
Image compression	H.264/MJPEG	
SVC	Support	
ROI encoding	Support 2 areas with adjustable levels	
Audio compression	G.711/G.722/G.726/MP2L2	
Protocols	IPv4/IPv6, HTTP, HTTPS, 802.1X, QoS, FTP, SMTP, UPnP, SNMP, DNS, DDNS, NTP, RTSP, RTP, TCP, UDP,IGMP, ICMP, DHCP, PPPoE	
Simultaneous live view	Up to 20	
Streams	Dual streams	
SD memory card	Built-in micro SD card slot, up to 64GB, support edge recording	
User/Host Level	Up to 32 users, 3 Levels: Administrator, Operator, User	
Security measures	User authentication (ID and PW), Host authentication (MAC address), IP address filtering	
Integration		
Application programming	Open-ended API, support Onvif, PSIA, CGI and Genetec, Support ezviz cloud P2P	
Web Browser	IE 7+, Chrome 18+, Firefox 5.0+, Safari 5.02+, support multi-language	
General		
Power	-AE: 24VAC/PoE+(802.3at), Max18W; -AE3: 24VAC/PoE(802.3af), Max 12W	
Working temperature	-AE: -30°C ~ 65°C (-22°F ~ 149°F) ; -AE3: -10°C ~ 50°C (14°F ~ 122°F)	
Humidity	90% or less	
Protection level	IP66 (outdoor),TVS 4,000V lightning protection, surge protection and voltage transient protection	
Impact Protection Outdoor	IEC60068-275Eh, 5J; EN50102, up to IK08; Indoor: IEC60068-275Eh, 5J; EN50102, up to IK08	
Dimensions	Φ179.4×239.5mm (Φ7.06"×9.43")(outdoor); Φ165×179.5mm(Φ6.50"×7.07") (indoor inceiling) Φ165×168mm(Φ6.50"×6.61") (indoor in-ceiling)	
Weight	Approx. 2Kg (4.41lbs)	
Mount option (for outdoor model)	Long-arm wall mount: DS-1602ZJ; Corner mount: DS-1602ZJ-corner; Pole Mount: DS-1602ZJ-pole; Power box mount:DS-1602ZJ-box;Swan-neck mount: DS-1619ZJ	

NOTE: Indoor models support ceiling and in-ceiling mount.